GOVERNMENT OF THE
DISTRICT OF COLUMBIA
Anthony Williams, Mayor

DOWNTOWN STREETSCAPE REGULATIONS

DEPARTMENT OF PUBLIC WORKS
OFFICE OF INTERMODAL PLANNING
AUGUST 2000

TABLE OF CONTENTS

Subject	Section	Page
Notice of Final Rulemaking	1100	1
Applicability	1100	2
General Rules	1101	2
Application Procedure	1102	3
Review of Streetscape Plans	1103	4
Modification of Previously Approved Streetscape Plan	1104	7
Standards for Sidewalks Treatment	1105	7
Standards for Trees and Landscaping	1106	19
Tree Maintenance Requirements	1107	23
Standards for Amenities and Street Furniture	1108	23
Standards for Underground Vaults	1109	27
Standards for Street Access	1110	28
Standards for Streetlights	1111	31
Definitions	1199	32

EXHIBITS

Title	Page
A. Description of Downtown Streetscape Impact Area Boundaries and Map	34
B. Specifications for Concrete Block Paving	36
C. Master Street Tree Plan	40

This document was prepared by
Edith R. Fitzhugh, Executive Secretary
Downtown Streetscape Committee
Department of Public Works
And
Lewis Booker and Lito Tongson
DC Downtown Business Improvement District

These regulations include design elements in the
Downtown DC Business Improvement District
Streetscape Enhancement Notebook, August 1999

DEPARTMENT OF PUBLIC WORKS

NOTICE OF FINAL RULEMAKING

The Director of the Department of Public Works, pursuant to the authority of Sections IV(A) and V of Reorganization Plan No. 4 of 1983, 30 DCR 6428 (December 16, 1983), effective March 2, 1984, and Mayor's Order 84-55, 31 DCR 1323 (March 16, 1984), hereby gives notice of the adoption of the following rules which amend the Public Space and Safety Regulations (24 DCMR). Comments have been received and one minor clarifying change has been made to Section 1108.5 (d) of the proposed rules as published on June 30, 2000, edition of the D.C. Register (47 DCR 5460). The final rules will delete obsolete information, and include additions and revisions to provide streetscape enhancements. This final rulemaking will be effective when published in the D.C. Register.

Title 24, Chapter 11, DOWNTOWN STREETSCAPE, is amended in its entirety to read as follows:

CHAPTER 11 DOWNTOWN STREETSCAPE

1100 APPLICABILITY

1100.1 This chapter shall apply to any person engaged in redevelopment or substantial rehabilitation, including sidewalk rehabilitation, where more than 50 percent of the sidewalk area adjoining a project is planned for construction, within the Downtown Streetscape Area.

1100.2 The boundaries of the Downtown Streetscape Area approximate the designated boundaries for the Downtown Urban Renewal Area and are defined in Exhibit A of these regulations.

1101 GENERAL RULES

1101.1 This chapter sets forth-minimum standards for the treatment of the public space in the Downtown Streetscape Area. Applicants may request variations and modifications to these standards that raise the quality of the materials used or the design of the public space.

1101.2 Recycled materials shall be used to meet the requirements of these regulations whenever possible.

1101.3 Except as provided in subsection 1101.5, the Director shall not approve the issuance of a permit listed in Subsection 1101.4 to any person unless the Director has approved a Step 1 streetscape plan pursuant to section 1103.

1101.4 Subsection 1101.3 shall apply to the recommendation for approval of the following permits:

(a) Excavation;
(b) Footings; and
(c) Location of manholes and other vaults as part of a building permit.

1101.5 Approval of the Step I streetscape plan is not required for the issuance of an excavation permit to remove or relocate a utility vault to prepare a site for project development.

1101.6 The Director shall not approve the issuance of a permit listed in subsection 1101.7 to any person unless the Director has approved a Step 2 streetscape plan pursuant to section 1103 or unless the Director has approved a combined streetscape plan pursuant to subsection 1102.5.

1101.7 Subsection 1101.6 shall apply to the following permits:

(a) Paving parking;
(b) Paving sidewalk, alleys, curb, and gutters;

GOVERNMENT OF THE DISTRICT OF COLUMBIA
DEPARTMENT OF PUBLIC WORKS

DOWNTOWN STREETSCAPE PLAN
APPLICATION FOR REVIEW

Streetscape #_____

_____
Application Date

_____
Name of Applicant

_____
Name of Developer

_____
Name of Contact

_____
Name of Architect

_____
Mailing Address

_____
Telephone Number

PROJECT INFORMATION

_____
Project Address

_____
Zoning Classification

_____ Square Number
_____ Lot Number
_____ Total Floor (Sq. Ft.)
_____ Height (Ft.)

_____ Office Space
_____ Retail Space
_____ Hotel Space

_____
Indicate any variation or exception to standards requested.
(Include additional pages, if necessary.)

_____
Indicate any approvals, or conditions on this project granted by the District.
(e.g., street or alley closing, zoning changes, historic preservation approvals, etc.
include additional pages, if necessary.)

PARKING/ LOADING FACILITIES

Parking: Number of Spaces _____
Bicycle Parking: Number of Spaces _____
Off-Street Parking: Number of Berths _____

CONSTRUCTION SCHEDULE

_____ Excavation Work
_____ Building Construction
_____ Streetscape Work

Step II Approval must be received before building construction reaches grade level. The developer will be responsible for the total cost of any changes needed as a result of a violation of this rule.

Figure1

(c) Fence, retaining walls, and hedges;
(d) Grading, alleys, and roadways; and
(e) Driveways.

1101.8 Streetscape Plan approvals shall expire if the appropriate Public space permits have not been secured and construction started within one year of the approvals.

1102 APPLICATION PROCEDURE

1102.1 To obtain a Step 1 streetscape review of a streetscape plan, an applicant shall submit an application on a form (Figure1) provided by the Director and ten (10) copies of the streetscape plan as part of the public space permit application process.

1102.2 The streetscape plan submitted for the Step 1 streetscape review should show, if known, the following:

(a) Sidewalk treatment including proposed materials and paving patterns;

(b) The location and type of all existing and proposed streetlights, traffic signals, parking signs, other traffic control devices and parking meters;

(c) The location of existing and proposed tree spaces, tree species and proposed tree planting details;

(d) The location, design and dimension of all existing and proposed driveways and curb cuts, sewer and water connections, utility lines, and oil tank openings;

(e) The length of the radii for all driveways, alleys, and street corners;

(f) Vaults or any other underground projection below public space, sidewalks or alleys;

(g) Metrobus stops, bus shelters, and Metrorail station entrances;

(h) The location and size of pedestrian entrances, including, but not limited to, store entrances and through-building passageways;

(i) The size and location of shop windows;

(j) The location and design of loading berths, taxi, bus, and other vehicle queuing, waiting areas, or other drop-off or pick-up areas and facilities. The plans for loading berths shall include the number of berths and details of access to the berths;

(k) Top of curb profiles, alley profiles, sidewalk cross slopes, and final street grades;

(l) The location of street amenities;

(m) Elevation of any portion of the building facing a street; and

(n) Handicap ramp locations and details.

1102.3 To obtain a Step 2 Streetscape review of a streetscape plan, an applicant shall submit ten (IO) copies of the streetscape plan as part of the public space permit application process.

1102.4 The streetscape plan submitted for the Step 2 Streetscape review shall show the following:

(a) The actual paving materials, their design and support details, landscaping treatment and planting details, final sidewalk grades and any streetscape amenities with necessary details for installation, and drainage details;

(b) Design and location of the sidewalk level streetscape elements, including but not limited to, the designated tree species, tree box plantings, specific designs, number and location of any streetscape hardware, pedestrian amenities, and decorative fixtures; and

(c) The treatment of vault covers.

1102.5 Applicant may, subject to approval by the Director, submit a combined streetscape plan that shows the elements required by subsections 1102.2 and 1102.4. A combined streetscape plan shall be submitted pursuant to the time period set for a Step 1 Streetscape plan.

1102.6 The applicant shall clearly indicate on the submitted streetscape plan any variation or exception to the standards set forth in this chapter and the applicant shall provide a letter describing the variation or the exception and its underlying rationale.

1102.7 All drawings for a Step 1 or a Step 2 Streetscape review shall be submitted to the Executive Secretary, Downtown Streetscape Review Committee, Department of Public Works, 7th floor, 2000 14th Street, NW, Washington, D.C.

REVIEW OF STREETSCAPE PLANS

1103.1 The Director shall review the submitted streetscape plans to ensure that the submitted streetscape plan and the application have all the required and necessary information.

1103.2 The Director shall notify the applicant within five (5) working days of the adequacy of the information included in the submitted streetscape plan. When necessary, the streetscape plan shall be returned to the applicant for the inclusion of any information that is required or necessary.

1103.3 The applicant may request, and the Director may grant, upon good cause shown, that the streetscape plan be reviewed in an expeditious manner.

1103.4 The Director shall convene a committee to review a submitted streetscape plan and to provide a recommendation to the Director on whether the Director should approve or disapprove the submitted streetscape plan.

1103.5 The Committee shall be appointed by the Director and shall consist of representatives of the Design, Engineering and Construction Administration, the Water and Sewer Utility Authority, the Transportation Systems Administration, the Public Space Maintenance Administration and the Office of Policy and Planning.

1103.6 The Director shall request that a representative from the Office of Planning, the American Institute of Architects and the American Society of Landscape Architects serve as advisory members to the Committee.

1103.7 The Committee shall, within three (3) weeks of the submission of the streetscape plan, review the streetscape plan to determine if the streetscape plan conforms to the requirements of this chapter and recommend to the Director whether the streetscape plan (and any requested variation or exception to the standards) should be approved, disapproved, or modified.

1103.8 Variations or exceptions may be recommended for approval if the applicant has demonstrated that the following conditions (a) through (c) have been satisfied or that condition (d) has been adequately demonstrated:

(a) The exception or variation will improve or raise the quality of the streetscape materials or improve or raise the quality of the design of the public space;

(b) The exception or variation is compatible with the adjoining sidewalk and public space;

(c) That if the project is an historic landmark or in an historic district, the exception or variation is compatible with the historic landmark or historic district; and

(d) Compliance with these rules or any provision thereof imposes an undue hardship on the applicant.

1103.9 Except as provided for in subsection 1103.10, the applicant shall be notified within five (5) business days of the date the Director receives the Committees's recommendation. Written notification of the decision shall be transmitted to the applicant within ten (10) working days of the Director's decision.

1103.10 When the Committee recommends disapproval of the submitted streetscape plan, or of an element of the plan, the Executive Secretary of the Committee shall notify the applicant and arrange a meeting between the applicant and members of the Committee, as deemed necessary.

1103.11 When applicable, the applicant shall submit an amended streetscape plan to the Committee. The Committee will consider the amended streetscape plan pursuant to subsection 1103.7.

1103.12 When appropriate, copies of the Director's decision shall be forwarded to the Public Space Permits and Records Division, D.C. Department of Public Works.

1103.13 Following notification of Step 2 approval by the Director, the applicant shall submit three (3) copies of the approved streetscape plan to the Director.

1104 MODIFICATION OF A PREVIOUSLY APPROVED STREETSCAPE PLAN

1104.1 The Director may approve a modification of a previously approved streetscape plan when the following conditions are fulfilled:

(a) Repair of a streetscape element is necessary or when construction conditions after the situation that produced the original streetscape plan;

(b) Adhering to the approved streetscape plan will impose an undue hardship for the applicant; and

(c) A viable alternative and modified streetscape plan is proposed.

1104.2 Modifications to approved streetscape plans shall be submitted pursuant to sections 1102 and 1103.

1105 STANDARDS FOR SIDEWALK TREATMENT

1105.1 On those sidewalks and streets that are not listed in subsection 1105.4 or 1105.6, the sidewalk shall be paved with pressed concrete pavers that shall meet the following requirements:

(a) The size shall be two feet (2') by three feet (3') by two inches (2") (nominal), or the appropriate metric equivalent;

(b) The color shall be limestone gray;

(c) Each paver shall have a non-slip finish;

(d) Except at the corner, the pattern shall be trisected running bond, which is perpendicular to and begins at the curb;

(e) The pattern at the corner of a sidewalk shall be a herringbone pattern;

(f) The joint shall have a maximum width of one-fourth of an inch (1/4"), with a combined width across the top of a maximum of five-eighths of an inch (5/8"). It should be swept with a dry sand cement mix of two (2) to one (1) by volume;

(g) Each paver shall be beveled to a maximum of three-sixteenths of an inch (3/16");

(h) If feasible, where an interruption in the sidewalk occurs, the pressed concrete pavers shall be cut to fit, otherwise the interruption shall be treated by a square collar of poured concrete of the same color and treatment as the paver; and

(i) The base shall have a four inches (4") poured concrete slab and a three - quarter (3/4") inch sand cement setting bed of a two (2) to one (1) mix by volume.

1105.2 The pressed concrete pavers shall be manufactured and installed according to the standard specifications contained in Exhibit B, Specifications for Pressed Concrete Block Pavers, and Figure 2, Pressed Concrete Paver Sidewalk Details.

1105.3 On a street listed in subsection 1105.4,and indicated in Figure 3, Brick Sidewalk Treatment Within The Downtown Streetscape Area, the sidewalk shall be paved with a brick paver specifically manufactured for use as a paver and which meet the following requirements:

(a) The size shall be eight inches (8") by four inches (4") by two and one-half inches (2 1/2") (nominal);

(b) The color shall be red as specified in the standard specifications;

(c) The pattern shall be as specified in the standard specifications;

(d) The joints (butt joints) shall be a maximum of one-eighth inch (1/8") and shall be swept with a dry sand cement mix of two (2) to one (1) by volume; and

(e) Each paver shall have a non-slip finish.

1105.4 Except as otherwise stated in this section, the sidewalk on both sides of the following streets shall comply with the requirements of subsection 1105.3:

(a) Massachusetts Avenue, NW from 3rd Street, NW to 5th Street, NW, on the north sidewalk from 5th Street, NW to 7th Street, NW and from 9th Street, NW to 15th Street, NW;

(b) M Street, NW from 3rd Street, NW to Thomas Circle (14th Street, NW);

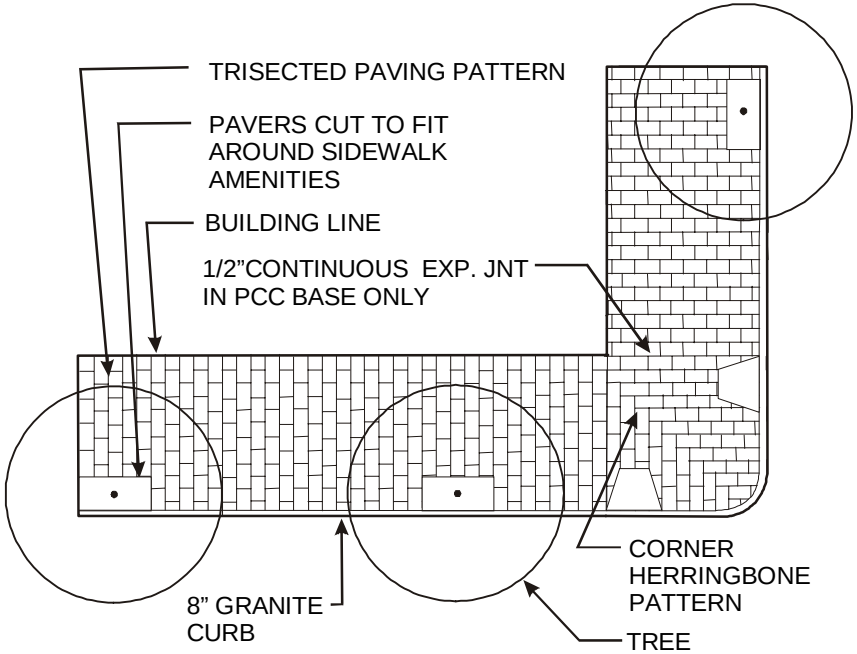

SIDEWALK TREATMENT

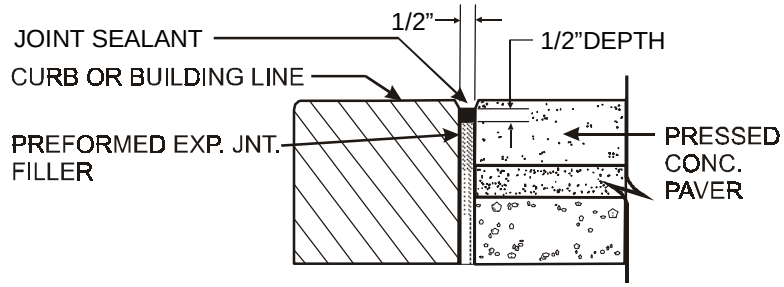

EXPANSION JOINT

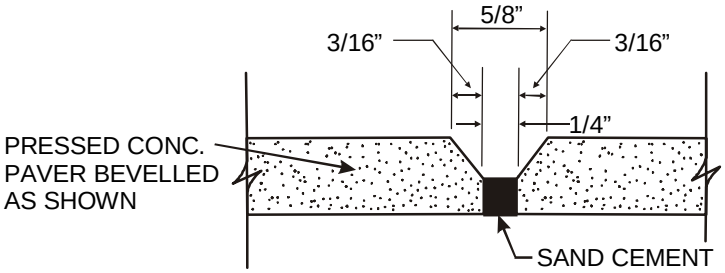

PAVER JOINT

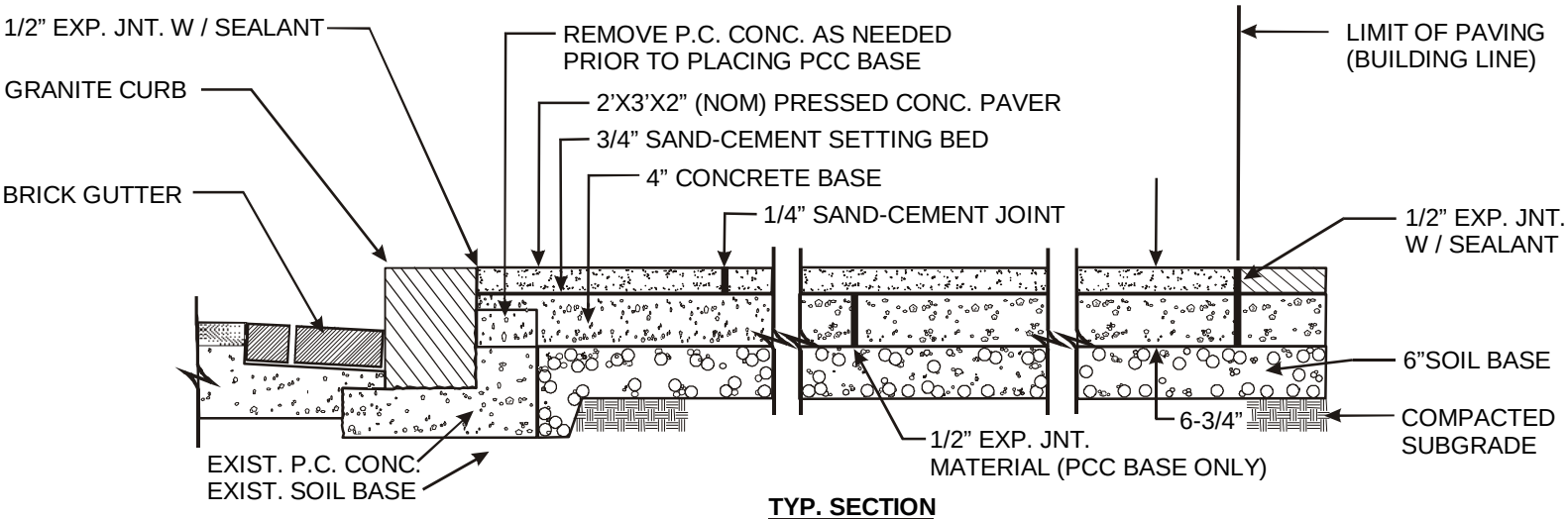

TYP. SECTION

PRESSED CONCRETE BLOCK PAVER

FIGURE 2

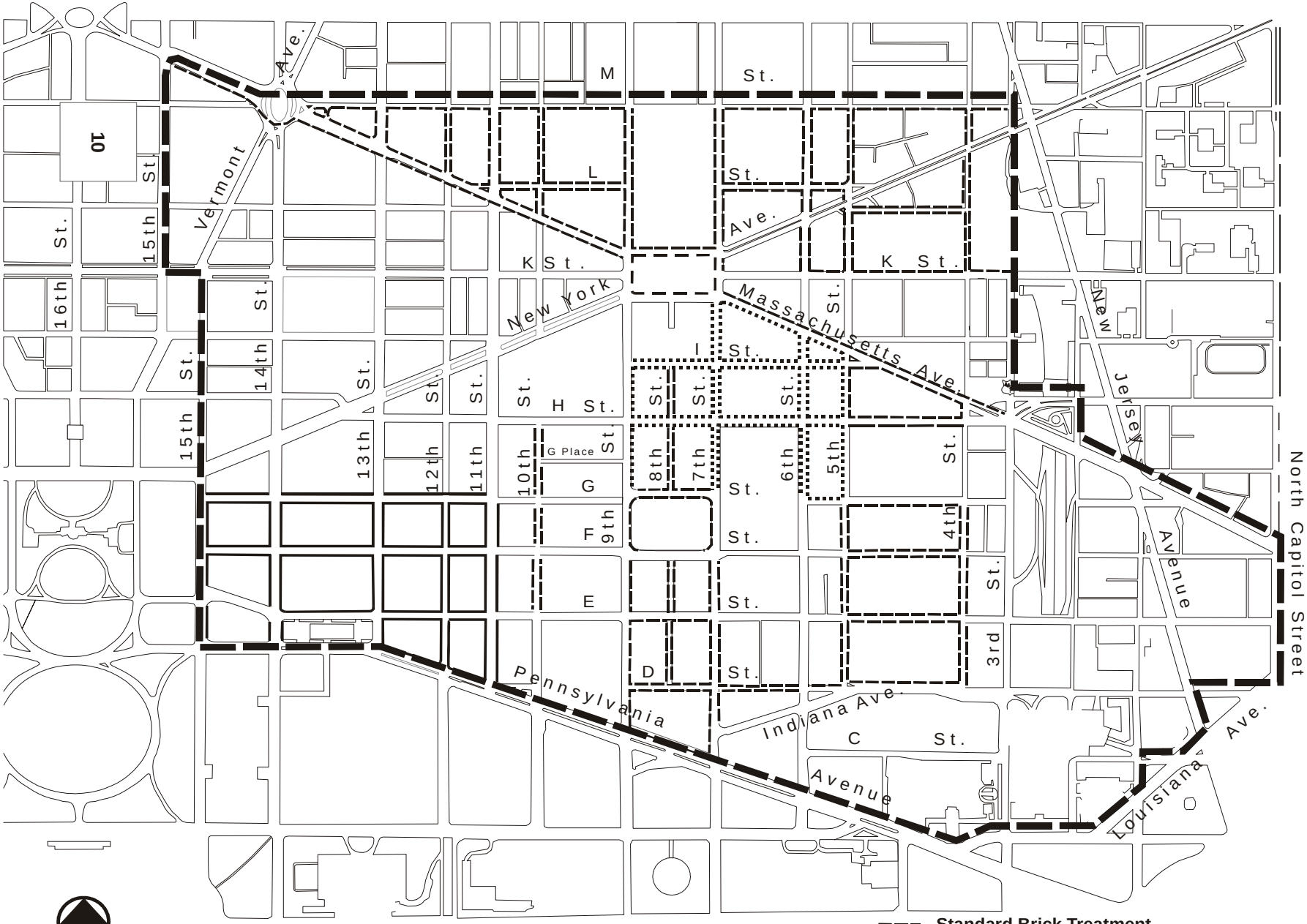

North
Not to scale

Make A Difference Pavers

Standard Brick Treatment

Chinatown Brick Treatment

SIDEWALK TREATMENT WITHIN THE DOWNTOWN STREETSCAPE AREA

FIGURE 3

(c) L Street, NW from 4th Street, NW to Massachusetts Avenue, NW;

(d) The north sidewalk of K Street NW from 3rd Street, NW to 6th Street, NW;

(e) I Street, NW from 5th Street, NW to Massachusetts Avenue, NW;

(f) The north sidewalk of H Street, NW from Massachusetts Avenue, NW to 4th Street, NW and H Street, NW from 4th Street, NW to 5th Street, NW;

(g) The south sidewalk of G Street, NW from 4th Street, NW to 5th Street, NW and G Street NW from 7th Street, NW to 9th Street, NW;

(h) F Street, NW from 4th Street, NW to 5th Street, NW;

(i) E Street, NW from Fourth Street, NW to Fifth Street, NW and on the south sidewalk from Seventh Street, NW to Ninth Street, NW;

(j) The north sidewalk of D Street, NW from 4th NW to 5th Street, NW and D Street, NW from Sixth Street, NW to Ninth Street, NW;

(k) 13th Street, NW from Massachusetts Avenue, NW to M Street, NW;

(l) 12th Street, NW from Massachusetts Avenue, NW to M Street NW;

(m) 11th Street, NW from Massachusetts Avenue, NW to M Street, NW;

(n) 10th Street, NW from E Street, NW to H Street, NW and from Massachusetts Avenue, NW to M Street, NW;

(o) The east sidewalk of 9th Street, NW from Pennsylvania Avenue, NW to G Street, NW, and from Massachusetts Avenue, NW to M Street NW;

(p) 8th Street NW from D Street, NW to F Street, NW and from G Street, NW to I Street, NW;

(q) 7th Street, NW from Pennsylvania Avenue, NW to G Street, NW and from Massachusetts Avenue to M Street, NW;

(r) 6th Street, NW from K Street, NW to M Street, NW;

(s) 5th Street, NW from D Street, NW to G Street, NW, the east sidewalk from H Street, NW to Massachusetts Avenue, NW and 5th Street, NW from K Street, NW to M Street, NW;

(t) 4th Street NW from D Street, NW to G Street NW, from H Street, NW to Massachusetts Avenue, NW, and from K Street, NW to M Street, NW; and

(u) The sidewalks abutting Mount Vernon Square, NW.

1105.5 On a street listed in subsection 1105.6 in the Chinatown area, as defined by the Office of Planning, and indicated in Figure 3, Chinatown brick sidewalk treatment shall be paved with brick pavers and decorative pavers as specified by the Committee and which shall meet the following requirements:

(a) The brick size shall be eight inches (8") by four inches (4") by two and one - half inches (2 1/2");

(b) The decorative brick paver size shall be eight inches (8") by eight inches (8") by two and one-half inches (2 1/2");

(c) The color of the decorative brick paver shall be red as specified in the standard specifications;

(d) Except adjacent to the building, the brick pattern shall be a basket weave pattern, which begins at the curb;

(e) The brick pattern adjacent to the building shall be a soldier course on its side, perpendicular to the building;

(f) The decorative brick paver shall be located in a random pattern, one for each 200 square feet of a sidewalk;

(g) The design layout of the decorative brick paver shall be approved by the Director;

(h) The Joint (butt joint) shall be at a maximum of one-eighth (1/8) of an inch and shall be swept with dry sand cement mix of two (2) to one (1) by volume; and

(i) The adjacent Property owner shall purchase and store at the site extra decorative brick pavers.

1105.6 Except as otherwise stated in this section, the sidewalks on both sides of the following streets shall comply with the requirements of subsection 1105.5.

(a) The south sidewalk of Massachusetts Avenue, NW from 5th Street, NW to 7th Street, NW;

(b) I Street, NW from 5th Street, NW to 9th Street, NW;

(c) H Street, NW from 5th Street, NW to 9th Street, NW;

(d) The north sidewalk of G Street, NW from
5th Street, NW to 6th Street, NW and
7th Street, NW to 9th Street, NW;

(e) 7th Street, NW from G Street NW to Massachusetts Avenue, NW;

(f) 6th Street, NW from G Street, NW to Massachusetts Avenue, NW;

(g) The west sidewalk of 5th Street, NW from G Street, NW to Massachusetts Avenue, NW; and

(h) The east sidewalk of 9th Street, NW from G Street, NW to I Street, NW.

1105.7 Pavers with markers in the Make A Difference designated locations shall comply with the criteria in the District of Columbia Code, Chapter 2. Streets, Section 7-233 and the locations in Section 7-236. (See Figure 3) Marker locations are the following:

(a) The North and South sidewalks of F and G Streets, NW between 11th and 15th Streets, NW;

(b) The North sidewalks of E Street, NW, between 11th and 14th Streets, NW and the South sidewalk of E Street, NW between 11th and 13th Streets, NW;

(c) The East sidewalks of 15th Street, NW, between Pennsylvania Avenue, NW and G Street, NW;

(d) The East and West sidewalks of 14th Street, NW. between Pennsylvania Avenue, NW and G Street, NW;

(e) The East sidewalks of 13th Street, NW between Pennsylvania Avenue, NW and E Street, NW and the East and West sidewalks of 13th Street, NW between E and G Streets, NW; and

(f) The East and West sidewalks of 11th and 12th Streets, NW between Pennsylvania Avenue, NW and G Street, NW.

1105.8 Personalized Pavers and Markers shall comply with Title 24 DCMR, Chapter 33, Section 3301, Occupation of Public Sidewalks with Personalized Pavers and Markers.

1105.9 Variations in the predominant paving material may be made at building entrances and along the building line. These variations are subject to Committee approval with the following provisions:

(a) The adjacent Property owner shall be responsible for the maintenance of any nonstandard paving material and design;

(b) At the entry to buildings, paving may be varied for up to one-third (1/3) of the distance from the property line to the face of the curb and for a width not to exceed twice the doorway size;

(c) The adjacent property owner shall always maintain and store at the site an extra ten percent (10%) of the nonstandard paving material; and

(d) Variations may include special designs, mosaics, and other design statements.

1105.10 The surface of a brick paver or a pressed concrete paver shall be non-slip.

1105.11 Large rough exposed aggregates in the sidewalk paving treatment shall not be approved.

1105.12 Smaller pressed concrete pavers or brick pavers, paved concrete, or other paving treatments may be approved where grade problems can not be resolved by any other method.

1105.13 Expansion joints between pavers and other elements shall not be greater than three-quarters (3/4") of an inch and shall be filled with caulking material.

1105.14 Driveways shall be paved in a manner that distinguishes the driveway from the sidewalk and the street.

1105.15 Ramps for use by the handicapped shall meet the following requirements:

(a) The standard material shall be concrete and color shall be lighter than adjoining pavement;

(b) Handicap ramps shall be located within the parallel lines and aligned with the back edge of the crosswalk;

(c) There shall be 5 ft. clearance at top of ramp; and

(d) Ramp shall conform to the requirements as specified in the standard specifications and in Figure 4 and Figure 4A, Wheelchair Ramp.

1105.16 New granite curbs shall be installed on all streets in the Downtown Streetscape Area according to Figure 5.

1105.17 New brick gutters shall be installed on all streets in the Downtown Streetscape Area according to Figure 6, Pattern for Brick Gutter.

1105.18 The crosswalk treatment shall conform to the requirements as specified in the standard specifications.

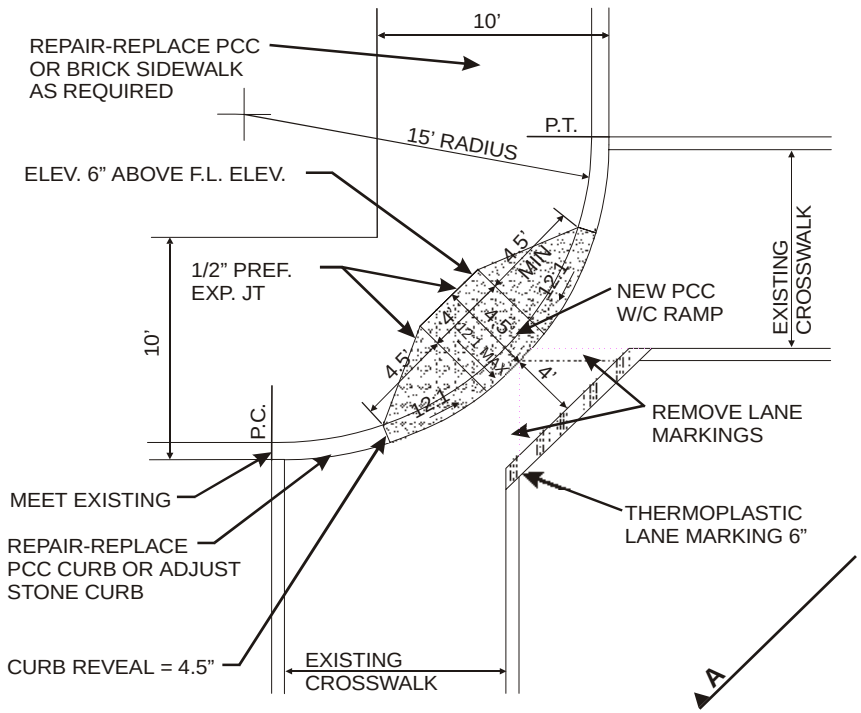

PLAN AT CORNER - 15' RADIUS
N.T.S.

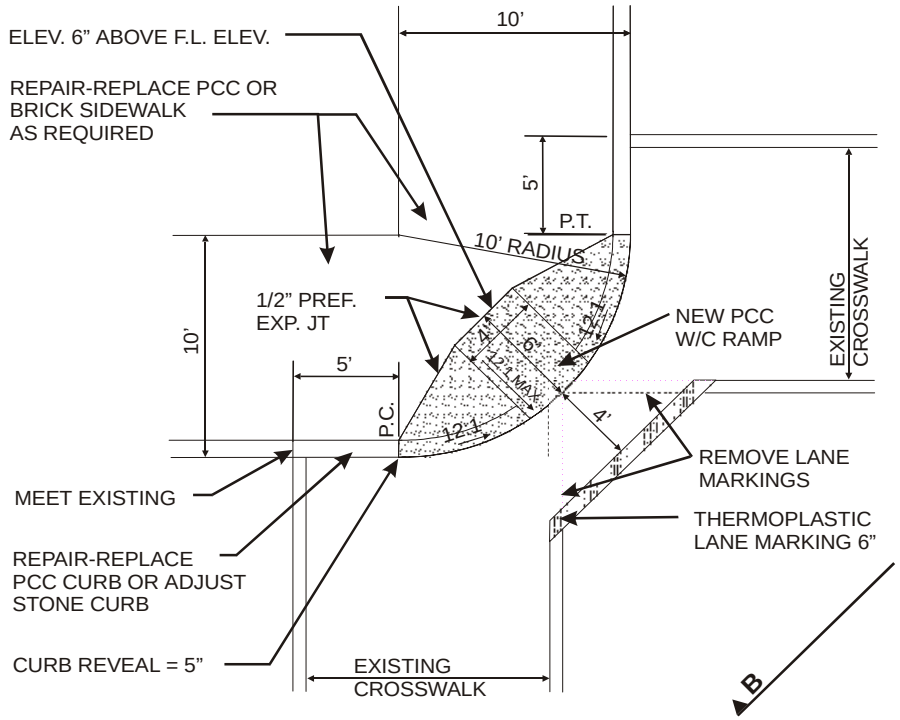

PLAN AT CORNER - 10' RADIUS
N.T.S.

NOTE: FOR ELEVATION "A" & "B" SEE FIGURE 4A.
RAMP TO BE LOCATED AT THE CORNER ONLY
WHEN IT CANNOT BE LOCATED AT THE SIDE.

WHEELCHAIR RAMP DETAILS

FIGURE 4

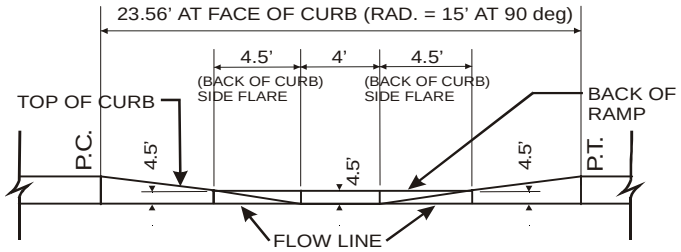

ELEVATION "A"

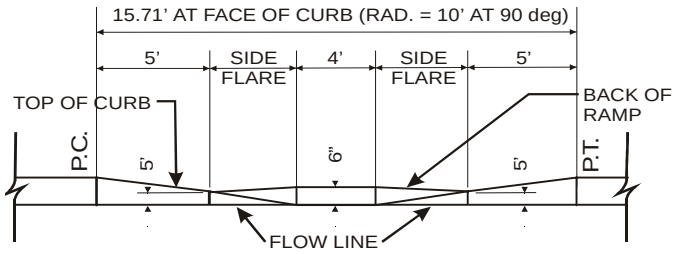

ELEVATION "B"

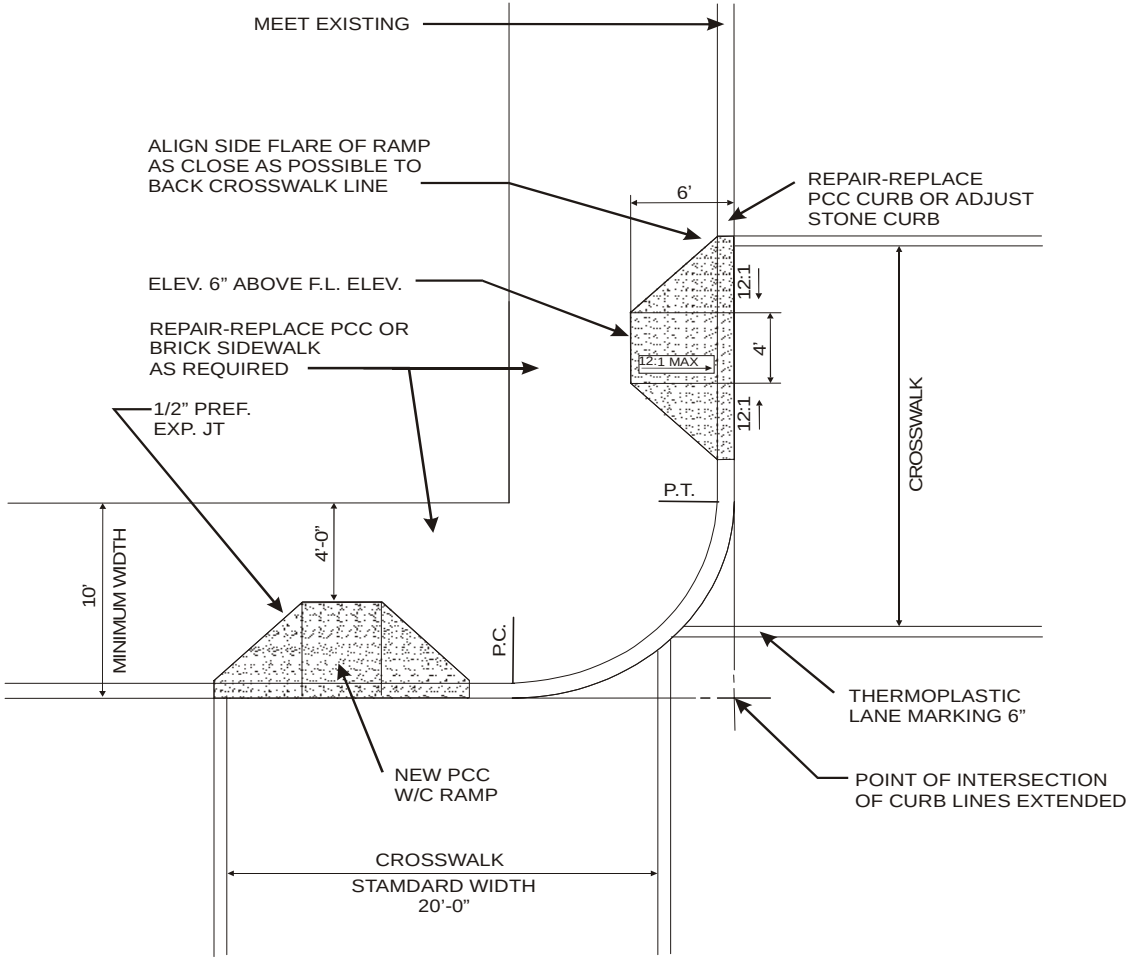

PLAN AT CORNER

WHEELCHAIR RAMP DETAILS

FIGURE 4A

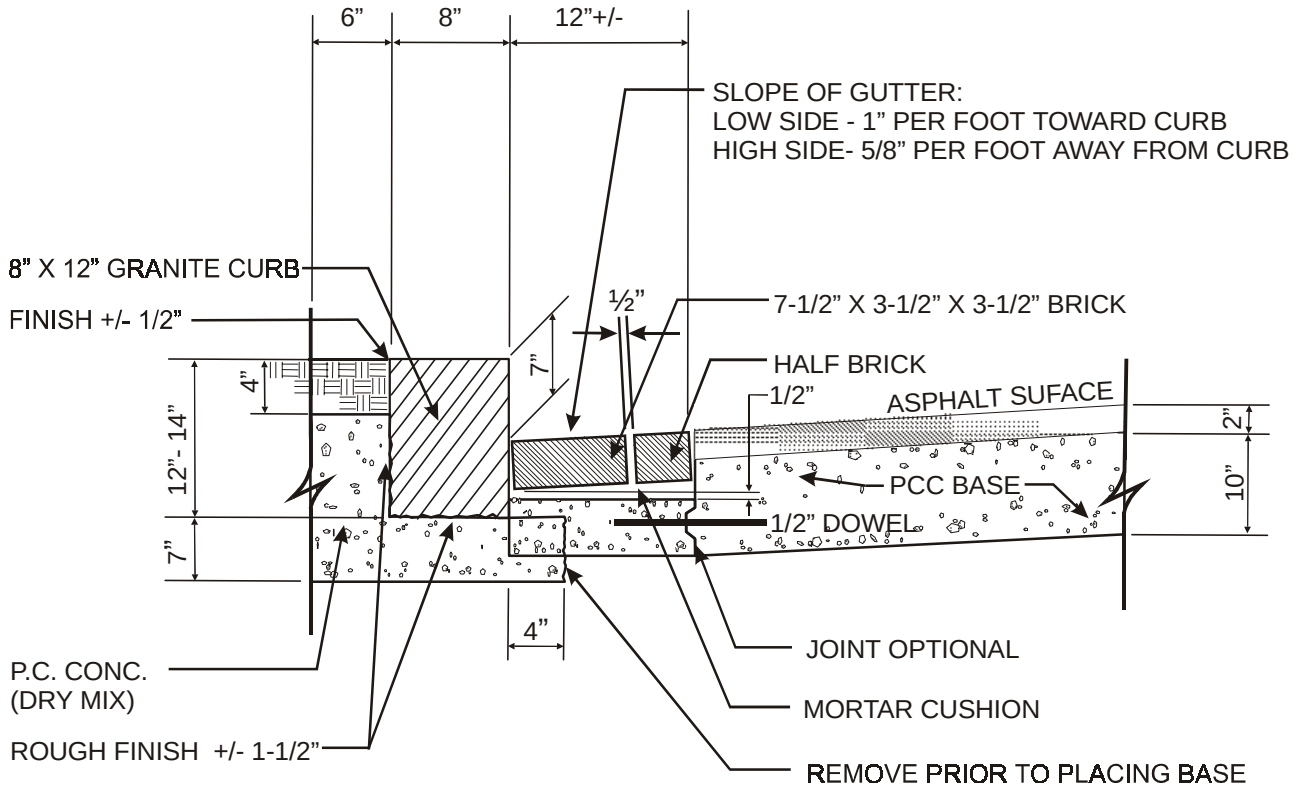

(NOT TO SCALE)

NOTE:

1.CONDITIONS BACK OF CURB VARY AS SHOWN ON PLANS.

2. P.C.C. (Dry Mix) SHALL BE PER SPCIFICATIONS AND
fc =2,500 PSI MIN.
3. MINIMUM DEPTH TO CONCAVE SURFACE ON ROUGH FINISH
SHALL BE 10”.

4. SEE FIGURE 6 FOR PATTERS FOR BRICK GUTTER.

8” x 12” GRANITE CURBS WITH BRICK GUTTER

FIGURE 5

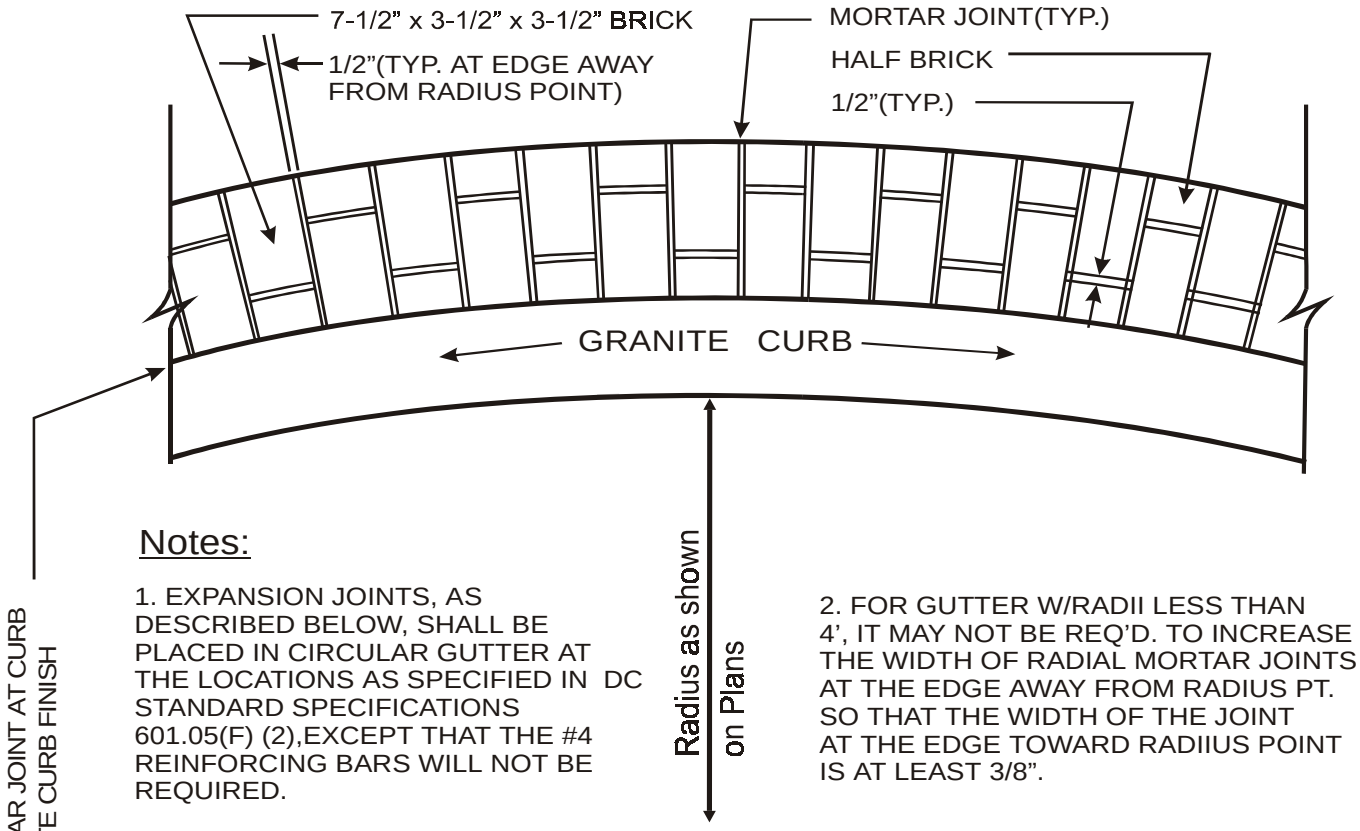

Notes:

1. EXPANSION JOINTS, AS DESCRIBED BELOW, SHALL BE PLACED IN CIRCULAR GUTTER AT THE LOCATIONS AS SPECIFIED IN DC STANDARD SPECIFICATIONS 601.05(F) (2),EXCEPT THAT THE #4 REINFORCING BARS WILL NOT BE REQUIRED.

2. FOR GUTTER W/RADII LESS THAN 4', IT MAY NOT BE REQ'D. TO INCREASE THE WIDTH OF RADIAL MORTAR JOINTS AT THE EDGE AWAY FROM RADIUS PT. SO THAT THE WIDTH OF THE JOINT AT THE EDGE TOWARD RADIIUS POINT IS AT LEAST 3/8".

CIRCULAR SECTION

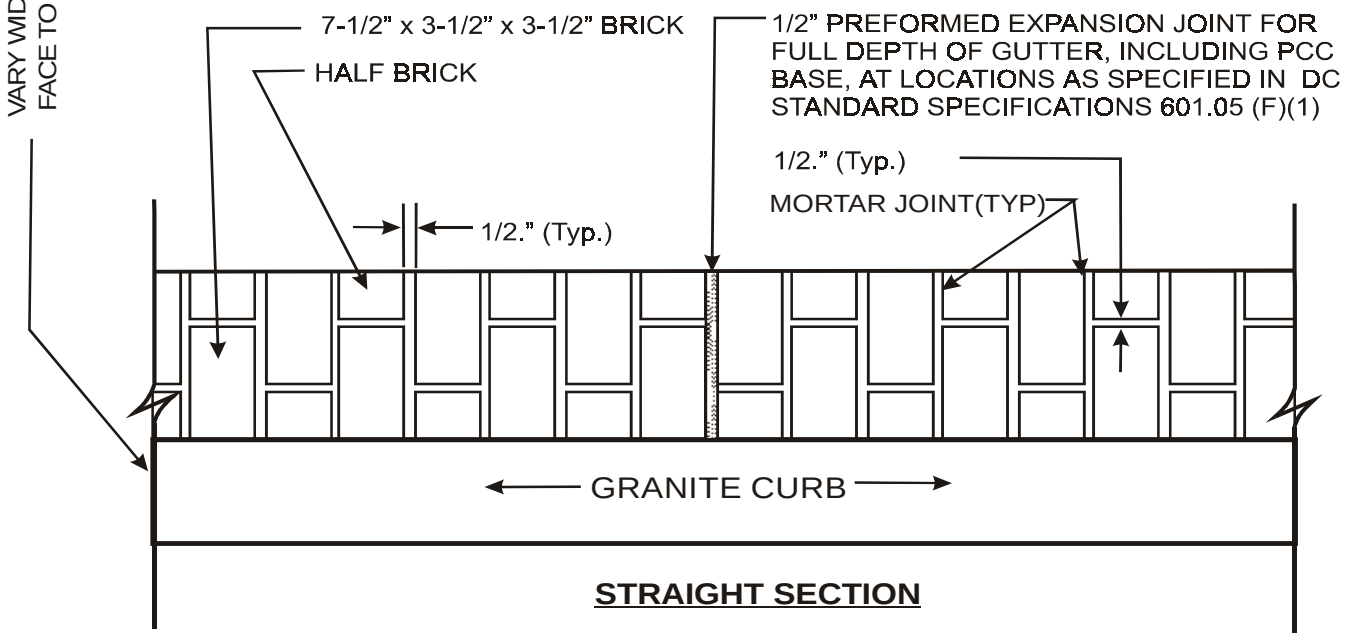

STRAIGHT SECTION

PATTERNS FOR BRICK GUTTER

FIGURE 6

1106 STANDARDS FOR TREES AND LANDSCAPING

1106.1 Where a conflict exists between the standards set forth in this section and standards set forth in Sections 1105 and 1109, the standards set forth in this section shall take precedence.

1106.2 One (1) row of trees shall be required on each side of the street.

1106.3 Repealed

1106.4 Except as provided for in subsection 1106.5, the species of the required trees shall be in conformance with the Master Street Tree Plan as approved by the Director. The Master Tree Plan is contained in Exhibit C.

1106.5 Subject to approval by the Director, the second row of trees on Indiana Avenue, and K Street east of 12th Street, NW and any other additional rows of trees proposed by the applicant, may be of a species selected by the applicant and approved by the Director.

1106.6 The trees shall be planted to conform to the following requirements:

(a) Trees shall be planted a minimum of forty feet (40') from the intersection of the radius tangent line and the curb and shall allow motorists and pedestrians to clearly view traffic control devices;

(b) Trees shall be planted a minimum of thirty feet (30') feet to forty feet (40’) apart;

(c) Where necessary to avoid other fixed elements in the public space, trees may be planted a minimum of thirty feet (30') apart or a maximum of fifty feet (50') apart;

(d) On Massachusetts Avenue, trees shall be planted forty feet (40') apart with the second row of trees set back twenty feet (20') from the curb and staggered at even forty feet (40') intervals between curb trees;

(e) Trees shall be at least eight feet (8') from any building or utility vault;

(f) Trees shall be at least fifteen feet (15') from a streetlight;

(g) Trees shall be at least twelve feet (12') from any above grade building projection;

(h) Trees shall be at least ten feet (10') from a driveway or an alley;

(i) Trees shall be planted in the center of the tree space;

(j) When planted, the size (caliper) of the tree shall be at least three inches (3") to three and one half inches(3 1/2");

(k) Trees shall be nursery grown and planted balled and burlapped; and

(l) When planted, trees shall be supported by three wood stakes.

1106.7 Trees shall be spaced and planted to conform to planting details (Figure 7 and Figure 8) as approved by the Director.

1106.8 The tree space shall satisfy the following requirements:

(a) On those streets which are not listed in subsection 1105.4 and which are south of Massachusetts Avenue, the dimension of the tree space is four feet (4’) by ten feet (10') with a minimum depth of three feet (3’);

(b) With the exception of Massachusetts Avenue, streets listed in subsection 1105.4, and on all other streets north of Massachusetts Avenue, the tree space adjacent to the curb shall be four feet (4’) wide and continuous and shall have a minimum depth of three feet (3’);

(c) The tree space on Massachusetts Avenue shall be a six feet (6’) wide continuous space;

(d) The tree space shall be back filled with a planting mix specifically approved by the Director;

(e) The tree space shall be protected by the installation of plantings with ground cover to be maintained by the adjacent property owner. The types of ground cover and plantings in a tree space shall be specified by the applicant and are subject to Committee approval;

(f) Crushed rock or gravel shall not be used for ground cover;

(g) The tree space shall be open to soil on all sides; and

(h) Where an enclosed tree space is required due to the below grade restrictions, drainage shall be provided from beneath the tree space.

1106.9 Where public space exists between the edge of the sidewalk and the property line, a landscape plan for this area shall be required as part of the submitted streetscape plan.

1106.10 Subject to approval by the Committee, raised planter boxes shall be permitted at the edge of the public space between the sidewalk and the property line or at the building line, provided that the following requirements are fulfilled:

(a) Raised planter boxes shall be a minimum of ten (10') feet from the curb;

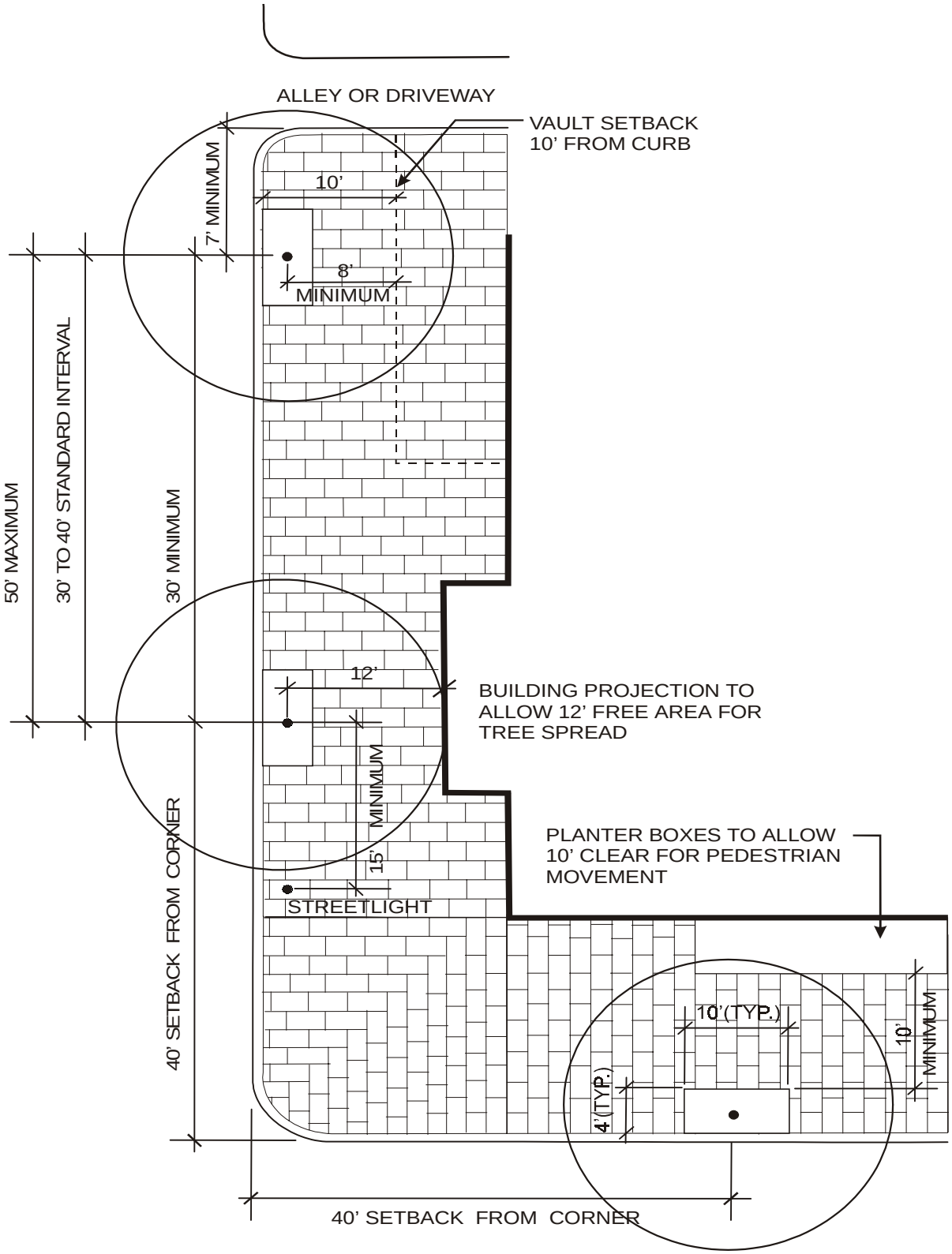

TREE INSTALLATION AND SPECIFICATIONS

FIGURE 7

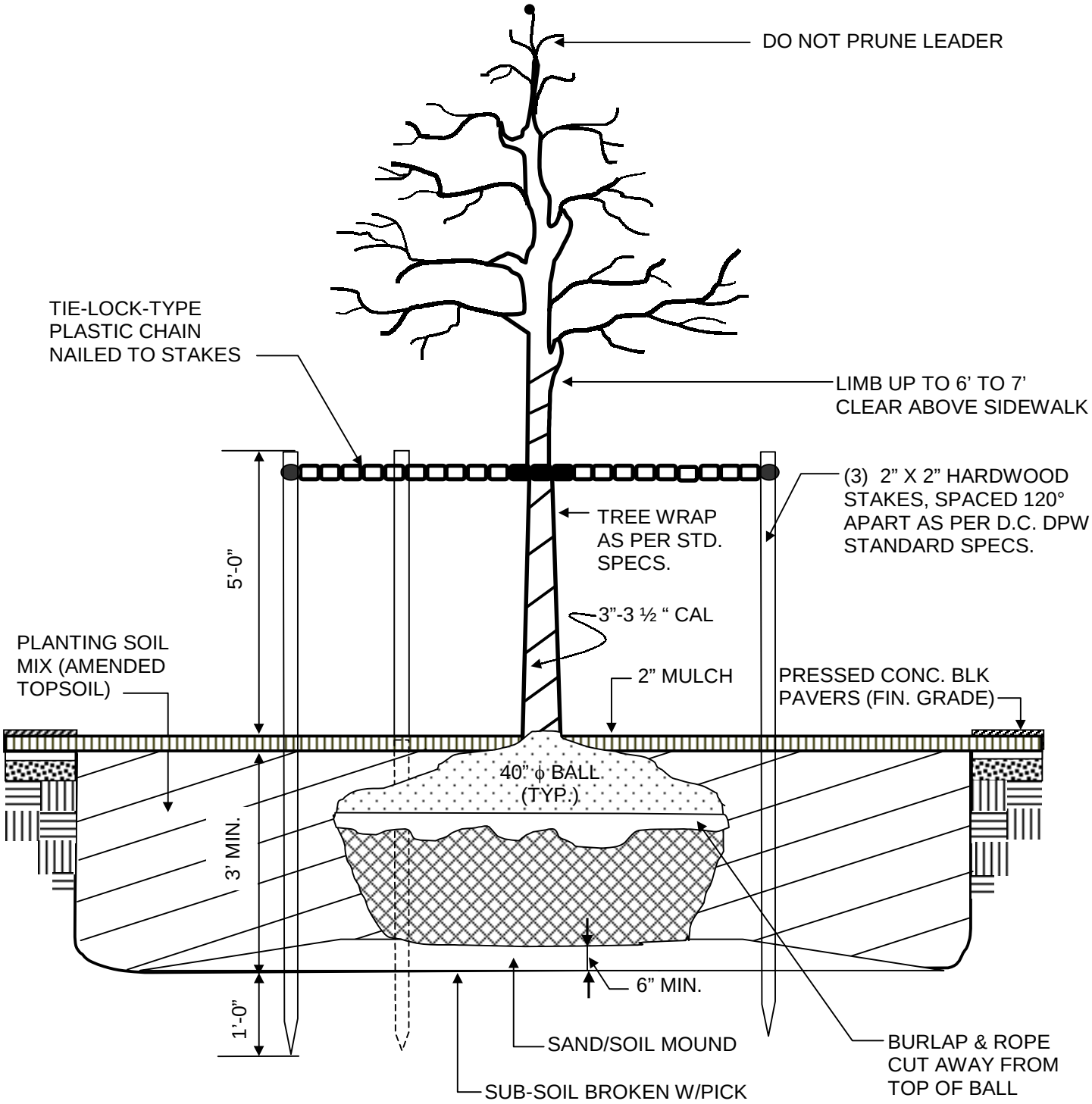

(NO SCALE)

NOTE: STAKING AND GUYING SHALL BE REMOVED AT THE END OF THE PLANT ESTABLISHMENT PERIOD

TYPICAL CURBSIDE TREE PLANTING DETAIL

FIGURE 8

(b) Raised planter boxes shall be clear of other sidewalk streetscape elements, including, but not limited to, trees and tree spaces, signs, meters and streetlight poles; and

(c) Where planter boxes are accessible to pedestrians, the planter boxes may be designed to serve as seating.

1106.11 Installation of electrical service within the tree box shall be subject to the approval of the committee. Electrical service shall be metered to the owner's building.

1107 TREE MAINTENANCE REQUIREMENTS

1107.1 Any person who installs a tree pursuant to this chapter shall guarantee the life of the tree for one (1) year and shall replace any tree that dies or becomes diseased during the one (1) year period.

1107.2 The adjacent property owner shall water any tree in the public space.

1107.3 The adjacent property owner shall perform any needed maintenance of the tree space, including, but not limited to, cleaning, weeding, mulching, and replacement of plantings, or ground cover.

1107.4 The adjacent property owner shall perform any needed general maintenance work on landscaped areas and planter boxes installed on public space.

1107.5 The adjacent property owner or the Department may perform any emergency maintenance of a tree in the public space.

1108 STANDARDS FOR AMENITIES AND STREET FURNITURE

1108.1 Subject to approval by the Public Space Committee and with the recommendation of the Committee, benches, trash receptacles and other street furniture and amenities may be installed in the public space.

1108.2 Any person who installs benches and other street furniture, trash receptacles and other amenities in the public space pursuant to this chapter shall guarantee their maintenance and replacement for one (1) year.

1108.3 After the one (1) year period provided for in subsection 1108.2, the adjacent property owner shall be responsible for the maintenance and replacement of the street furniture and amenities.

1108.4 Maintenance and replacement schedules for the street furniture and amenities shall be determined by the Director.

1108.5 Benches placed in the public space shall meet the following criteria:

(a) Benches shall be wrought iron with wood slats;

(b) Benches shall have backs and be of a Victorian style design approved by the Director;

(c) Benches shall be a maximum eight feet (8') long. Benches six feet (6') or longer shall have a center arm rest;

(d) Benches shall either face the building and be placed 3 feet from the curb, or face the curb, and be placed 2 feet from face of building; and

(e) Benches shall be anchored to the paving.

1108.6 Benches shall be installed and maintained by the adjacent property owner.

1108.7 Trash receptacles placed in the public space shall meet the following criteria:

(a) Trash receptacles shall be wrought iron frame and electrostatically powder coated, with riveted steel lid and hinged door, as manufactured by Victor Stanley, Dunkirk, Maryland, (Figure 9) or equal as approved by the Director;

(b) Each trash receptacles shall be 36-gallon capacity, 41-3/4 inches high, 23-1/2 inches base diameter and 28 inches top diameter and furnished with unbreakable 36 gallon high-density plastic liner;

(c) Each trash receptacle shall be furnished with a spun steel lid with an 18 3/4 inch diameter opening. The steel lid must be riveted to the inner frame perimeter, so that it cannot be removed;

(d) Each trash receptacle shall be furnished with a base consisting of a three-point anchoring system with five (5) hard plastic coated adjustable leveling glides. A one-eighth (1/8") inch steel plate with three (3) 3/4 inch holes for anchoring must be welded to the base assembly;

(e) Each trash receptacle shall be furnished with a hinged steel door fitted with a latch;

(f) Color of trash receptacle shall be black; and

(g) Installation of trash receptacles shall be per manufacturer's recommendation, with District of Columbia government direction for placement.

Trash receptacles shall be wrought iron frame and electrostatically powder coated, with riveted steel lid and hinged door. Each receptacle shall be furnished with a hinged door fitted with a latch.

(Anchor bolts provided by others)

Copyright 1999
Victor Stanley, Inc.
All Rights Reserved
U.S. Patent # 304,253

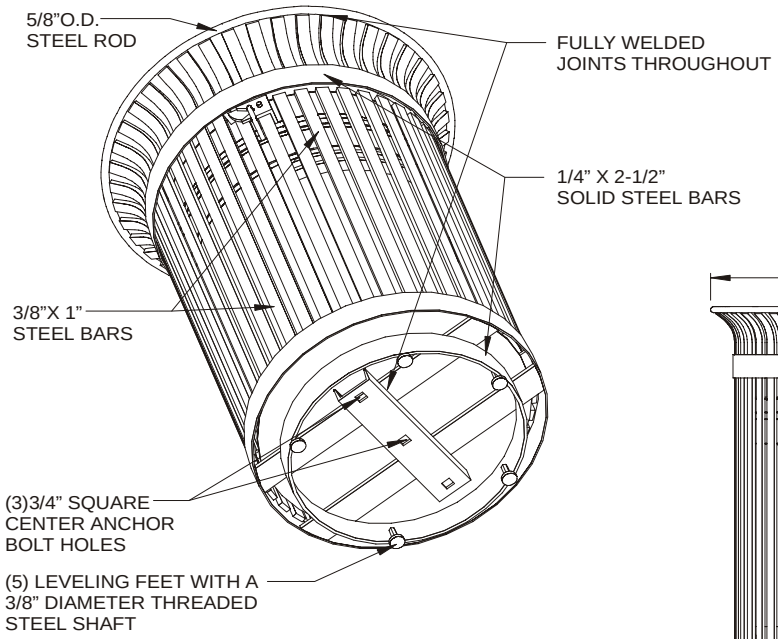

BOTTOM VIEW

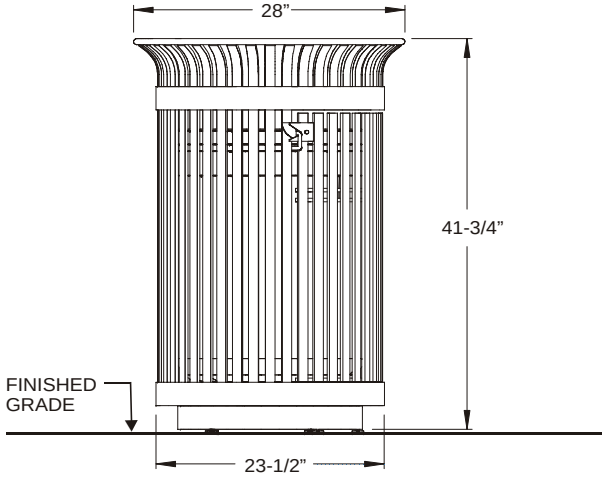

SIDE VIEW

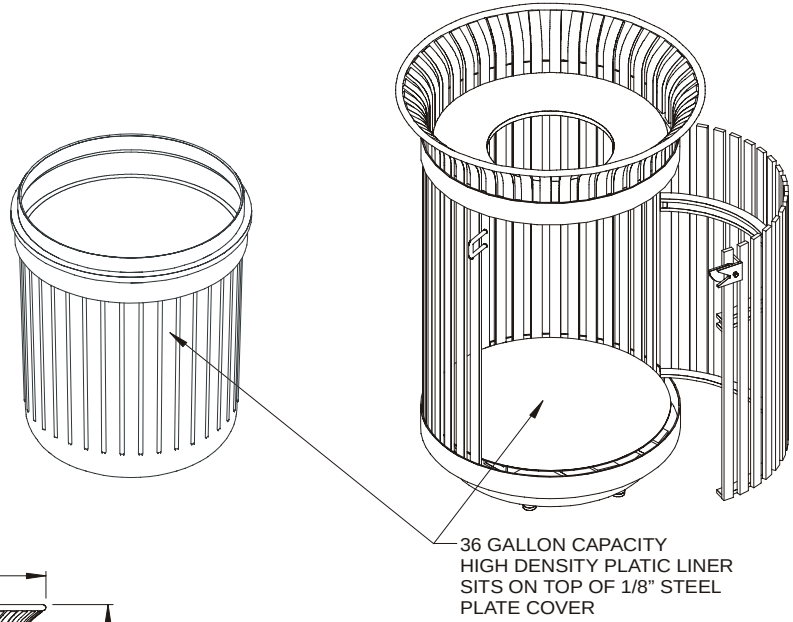

PERSPECTIVE

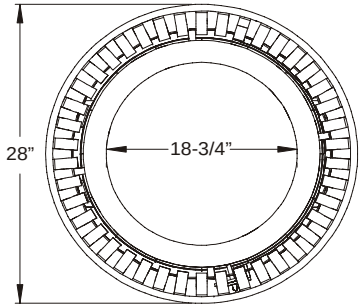

TOP VIEW

TRASH RECEPTACLE DETAILS AND SPECIFICATIONS

FIGURE 9

1108.8 The District shall install all trash receptacles within the boundaries of the Business Improvement District. All private trash receptacles in other areas shall be installed by adjacent property owner.

1108.9 All trash receptacles shall be maintained and repaired by adjacent property owners. The District shall pick up from all trash receptacles on public space within the Business Improvement District boundaries.

1108.10 Subject to approval by the Public Space Committee and with the recommendation of the Committee, an applicant may install public art in the public space between the sidewalk and the property line.

1108.11 Banners may be used-on streetlights within the Downtown Streetscape Area pursuant to public space regulations with the approval of the Committee.

1108.12 Location of bike racks in public space shall be coordinated with and approved by Traffic Safety Branch, Bureau of Traffic Services.

1108.13 Bike racks shall meet the following criteria:

(a) The bike rack shall be an inverted U type. The bike rack should support the frame of the bike at two locations; allow at least one wheel along the frame to be locked to the rack; and allow cyclist the option of using either the popular U-lock or a cable with padlock;

(b) Bike racks shall be 2-3/8" O.D. (outside diameter), galvanized, schedule 40 steel pipe, ASTM 53A, powder coated, gloss black, measuring 30" across and 36" high above grade;

(c) Bike rack shall have minimum 5ft. clearance from other amenities and street furniture;

(d) Bike rack shall be placed parallel to the curb and 3ft. from the face of curb;

(e) Bike rack shall be placed within the typical 26 feet distance from the end of the Metro Bus Stop Zone;

(f) Bike rack placement shall allow a minimum of ten (10) feet of clearance for pedestrian flow; and

(g) Bike racks shall not be placed in an entrance or loading zone.

1108.14 Street furniture and amenities shall be located to provide twenty feet (20') on one side of a tree box space to allow for the maneuvering of tree maintenance equipment.

1109 STANDARDS FOR UNDERGROUND VAULTS

1109.1 All vaults shall be set back at least ten feet (10') from the curb, and, where two (2) rows of trees are proposed or required, the first level of the building vaults shall be set back at least thirty feet (30') from the curb.

1109.2 Where the existing building vault is within ten feet (10') of the curb (or within thirty feet (30') of the curb where two (2) rows of trees are required or proposed), the applicant shall be required to abandon and backfill the existing vault with a suitable material solely to the extent necessary for the planting of the trees required by Section 1106.

1109.3 Utility vaults shall not be within eight feet (8') of a tree location. Utility vaults shall conform to the applicable District of Columbia laws, rules, and regulations.

1109.4 PEPCO equipment serving new construction or substantial rehabilitation shall be located in vaults or on pads on private property; except the Director may approve a different location for a utility vault, pad, or manhole when the following conditions are satisfied:

(a) Locating PEPCO equipment in a vault or within or on the roof of a building or on a pad on private property is not feasible;

(b) The proposed location for the utility vault shall not be within or under the major pedestrian movement areas;

(c) The manhole covers shall be solid and filled with a material the same as or compatible with the adjoining sidewalk;

(d) When proposed to be located in a driveway or a public alley, the utility vaults with the solid filled covers shall be capable of withstanding the weight of commercial vehicles, and shall be located to avoid major pedestrian movement areas; and

(e) When proposed to be located on the public space between the sidewalk and the property line, the utility vault may be located in this area when the following conditions are fulfilled:

(1) The utility vault is incorporated into the landscape design;

(2) The utility vault does not interfere with the planting of required trees; and

(3) The utility vault cover shall be solid and filled with a material the same as or compatible with the adjoining sidewalk.

1109.5 Plans submitted for Committee review shall show the depth of cover over building vault projections into public space. There shall be one foot (1') of soil fill between the top of the vault and the bottom of the sidewalk.

1109.6 Only existing grate covers on Metro utility vaults shall be allowed in public space between the sidewalk and the property line.

1109.7 Utility vault covers shall be constructed to allow the standard paving material at grade.

1109.8 When feasible and practical, existing vaults shall conform to the standard's set forth in this subsection.

1110 STANDARDS FOR STREET ACCESS

1110.1 The location of curb cuts and driveways shall be approved when the following conditions are fulfilled:

(a) The land use, traffic and pedestrian patterns, and transit operation in the area have been considered;

(b) Where feasible, access to loading and parking facilities shall be from an alley;

(c) Where feasible, loading facilities shall be located below grade;

(d) On the following streets, curb cuts and driveways shall be approved only if the applicant demonstrates that there is no other means or method of providing vehicular access to the property:

(1) F Street, NW between 7th Street and 15th Street;

(2) G Street, NW between 7th Street and 15th Street;

(3) 7th Street, NW between Pennsylvania Avenue and Massachusetts Avenue;

(4) 8th Street, NW between Pennsylvania Avenue and Massachusetts Avenue;

(5) 10th Street, NW between Pennsylvania Avenue and H Street; and

(e) Circular driveways, building entrance driveways, porte cocheres, and laybys shall not be permitted in the Downtown Streetscape Area, unless approved by the Director.

1110.2 The design of a driveway shall fulfill the following requirements:

(a) Driveways and their aprons shall be poured concrete and flush with grade of sidewalk;

(b) A driveway shall be a minimum width of twelve feet (12') and a maximum width of twenty-five feet (25');

(c) The radius for curb returns for driveways shall be six feet (6');

(d) There must be a minimum six feet (6') wide pedestrian safety island between two driveways that are more than twenty four feet (24') wide. This pedestrian island shall match the same material used for the sidewalk. It shall have a three feet (3') radius at the curb of the street;

(e) All alleys are required to have a minimum width of twenty feet (20') and radius at curb shall be ten feet (10'). Driveway shall not be located within sixteen feet (16') of another driveway or alley;

(f) Driveway shall be at least eight feet (8') from the adjacent interior property line;

(g) Driveway shall be at least forty feet (40') from the point of the intersection of the two (2) street curbs;

(h) Driveways shall be designed to avoid vehicle backing and vehicle waiting within the street;

(i) Where the driveway provides access to a parking facility, the driveway shall provide a sufficient off-street storage area for vehicles waiting to enter the parking facility; and

(j) Driveway shall have a maximum grade of twelve percent (12%) within the public space.

1110.3 Driveways shall be located according to the Driveway Location Standards (Figure 10) approved by the Director.

1110.4 The use of shared driveways for more than one (1) property or building and the shared use of parking and loading facilities by more than one (1) property or building shall be permitted.

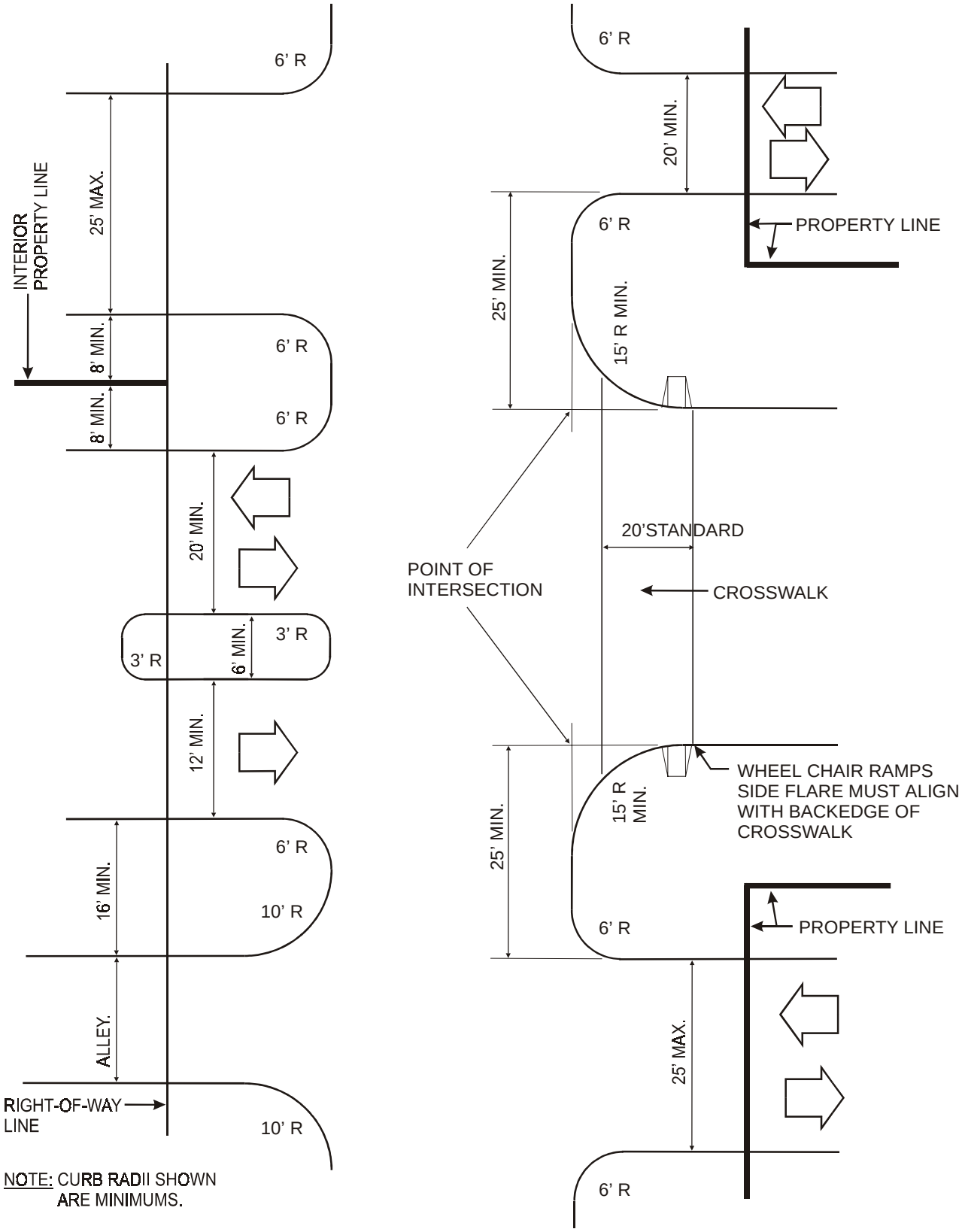

NOTE: CURB RADII SHOWN ARE MINIMUMS.

DRIVEWAY LOCATION STANDARDS

FIGURE 10

1111 STANDARDS FOR STREETLIGHTS

1111.1 The standard streetlight fixtures for the Downtown Streetscape Area shall be the following:

Streets: East-west streets except E, F, G and K Street, NW
Fixture: No 16 Single Globe, forty feet (40') on center.
Pattern: Staggered across the street.

Street: F Street, NW
Fixture: Twin-25 with sconces, forty feet (40') on center.
Pattern: Opposite across the street.

Street: E and G Streets, NW
Fixture: No.16 Single Globe, forty feet (40') on center.
Pattern: Opposite across the street.

Street: K Street east of 12th Street, NW
Fixture: Twin-20, forty feet (40') on center.
Pattern: Opposite across the street.

Street: K Street west of 12th Street, NW
Fixture: No. 16 Single Globe along sidewalk and twin-20 in the median, forty feet (40') on center.
Pattern: Staggered between the different fixtures on same side of street, opposite across the street.

Streets: North-south streets 2nd to 6th Streets, NW, 10th, 12th and 15th Streets, NW
Fixture: No. 16 Single Globe, sixty feet (60') on center.
Pattern: Staggered across the street.

Streets: 7th, 8th and 9th Streets, NW
Fixture: No. 16 Single Globe, forty feet (40') on center.
Pattern: Opposite across the street.

Street: 11th, 13th and 14th Streets, NW
Fixture: No. 18 Single Globe, sixty feet (60') on center.
Pattern: Staggered across the street.

Streets: Vermont, Indiana and New York Avenues, NW
Fixture: Twin-20, forty feet (40') on center.
Pattern: Opposite across the street

Streets: 16th Street, Massachusetts Avenue and New Jersey Avenue, NW
Fixture: Twin-20, eighty feet (80') on center.
Pattern: Opposite across the street

1111.2 The Twin-20 and Twin-25 with sconces fixtures shall be installed parallel to the curb.

1111.3 Pendant arm pole with streetlight luminare shall be installed at all corners of intersections.

1111.4 Color of all Single Globe and Twin-20 fixtures shall be Black.

1111.5 Color of all Pendant arm pole fixtures shall be Battleship Gray.

1111.6 Streetlights of the Chinese lantern design, as specified by the Committee, shall be located on the following streets in the Chinatown area as defined by the Office of Planning in a pattern approved by the Committee:

(a) I Street, NW from Fifth Street, NW to Ninth Street, NW;

(b) H Street, NW from Fifth Street, NW to Ninth Street, NW;

(c) Sixth Street, NW from G Street to Massachusetts Avenue, NW; and

(d) Seventh Street, NW from G Street, NW to Massachusetts Avenue, NW

1111.7 Any person who installs the Chinese lantern design streetlight pursuant to this chapter shall furnish all expenses for installation and other associated costs of the streetlights.

1111.8 Any person who installs the Chinese lantern design streetlight pursuant to this chapter shall purchase an additional streetlight (including pole and base) for each Chinese lantern design streetlight approved by the Committee. The additional streetlight(s) shall be stored by the D.C. Department of Public Works.

1111.9 The adjacent property owner shall provide paint for the maintenance of each Chinese lantern streetlight purchased.

1111.10 Streetlights shall be located to provide twenty (20') feet on one side of a tree box space to allow for the maneuvering equipment.

1199 DEFINITIONS

1199.1 The terms and phrases used in this chapter shall have the meanings set forth in this section.

Committee - the Downtown Streetscape Review Committee

Department - The District of Columbia Department of Public Works

Director - The Director of the Department or the Director's designee

The Downtown Streetscape Area - The Downtown Urban Renewal Area, as defined in the Zoning Regulations, Title 11 of the District of Columbia Municipal Regulations, and the west side of North Capitol Street and both sides of all other boundary streets of the Downtown Urban Renewal Area.

Downtown Business Improvement District – The area defined pursuant to section 4(c) of the Business Improvement District Act of 1996, effective May 29, 2996 (D.C. Law 11-134; D.C. Code section 1-2274 (c)).

Manhole - Vaults which house the equipment of any private or public utility company or agency.

Property Line - The line of demarcation between privately owned property fronting or abutting a street and the publicly owned property in such street.

Public space - All the publicly owned property between the property lines on a street, as such property lines are shown on the Department's records, and includes, but is not limited to, the roadway, tree spaces and sidewalks.

Redevelopment - The construction of a new building or a new structure.

Rehabilitation - The repair of an existing, reusable structure or building which provides a satisfactory improved physical condition for the intended use of the structure or building.

Standard Specifications - The District of Columbia Department of Public Works, Standard Specifications for Highways and Structures, 1996.

Street - A public highway as shown on the records of the District, whether designated as a street, alley, avenue, freeway, road, drive, lane, place, boulevard, parkway, circle, or by any other term.

Substantial Rehabilitation - The rehabilitation of an existing structure or an existing building when the estimated cost of the rehabilitation, as determined for a building permit, is (50%) percent or more of the value of the structure.

Vault - A structure or an enclosure of space beneath the surface of the public space, including, but not limited to tanks for petroleum products, utility vaults and building vaults. If the structure or enclosure of space is divided horizontally into two (2) or more levels, the term "vault" shall be considered as applying to one (1) level only, and each level shall be considered as a separate vault.

EXHIBIT A

IMPACT AREA BOUNDARIES

The boundaries of the Downtown Streetscape Area are approximately the same as the designated street boundaries for the Downtown Urban Renewal Area. The west side of North Capitol Street, the north side of Pennsylvania Avenue and both sides of all other boundary streets are subject to the Streetscape Regulations. Further, when a project is on a corner lot, one side of which is within the boundaries subject to the Streetscape Regulations, the other side of the project also will be subject to these guidelines.

Description of Project Area

The boundaries of the Downtown Urban Renewal Area are described in the Downtown Urban Renewal Plan as follows: Beginning at the northwest corner of the intersection of Fifteenth Street, NW and Massachusetts Avenue, NW, thence along the north line of Massachusetts Avenue, NW to the northwest corner of Fourteenth Street, NW and Thomas Circle, thence along the north line of Thomas Circle to its intersection with the south line of "M" Street, NW to its intersection with the west line of Third Street, NW, thence along the west line of Third Street, NW to its intersection with the south line of "H" Street, NW, thence along the south line of "H" Street, NW, to its intersection with the west line of Second Street, NW, thence along the west line of Second Street, NW to its intersection with the south line of Massachusetts Avenue, NW, thence along the south line of Massachusetts Avenue, NW to its intersection with the west line of North Capitol Street, thence along the west line of North Capitol Street to its intersection with the north line of Louisiana Avenue, NW, thence along the north line of Louisiana Avenue, NW to its intersection with the north line of "D" NW, thence along the north line of "D" Street N.W, to its intersection with the west line of New Jersey Avenue, NW, thence along the west line of New Jersey Avenue, NW, to its intersection with the north line of Louisiana Avenue, NW, thence along the north line of Louisiana Avenue, NW to its intersection with the north line of "C" Street, NW thence along the north line of "C" Street, NW, to its intersection with the west line of First Street, NW, thence along the west line of First Street, NW to its intersection with the north line of Louisiana Avenue, NW, thence along the north line of Louisiana Avenue, NW to the intersection with the north line of Constitution Avenue, NW, thence along the north line of Constitution Avenue, NW, to its intersection with the east line of Second Street, NW, thence along the east line of Second Street, NW, to its intersection with the south line of Constitution Avenue, NW, thence along the south line of Constitution Avenue, NW to its intersection with the north line of Pennsylvania Avenue, NW, thence along the north line of Pennsylvania Avenue, NW to its intersection with the south line of "E" Street at Thirteenth Street NW, thence along the south line of "E" Street NW to its intersection with the west line of Fifteenth Street NW, thence along the west line of Fifteenth Street, NW to its intersection with the south line of "K" Street, NW, thence west along the south line of "K" Street, NW to its intersection with the west line of Fifteenth Street NW, thence north along the west line of Fifteenth Street, NW, to the point of beginning.

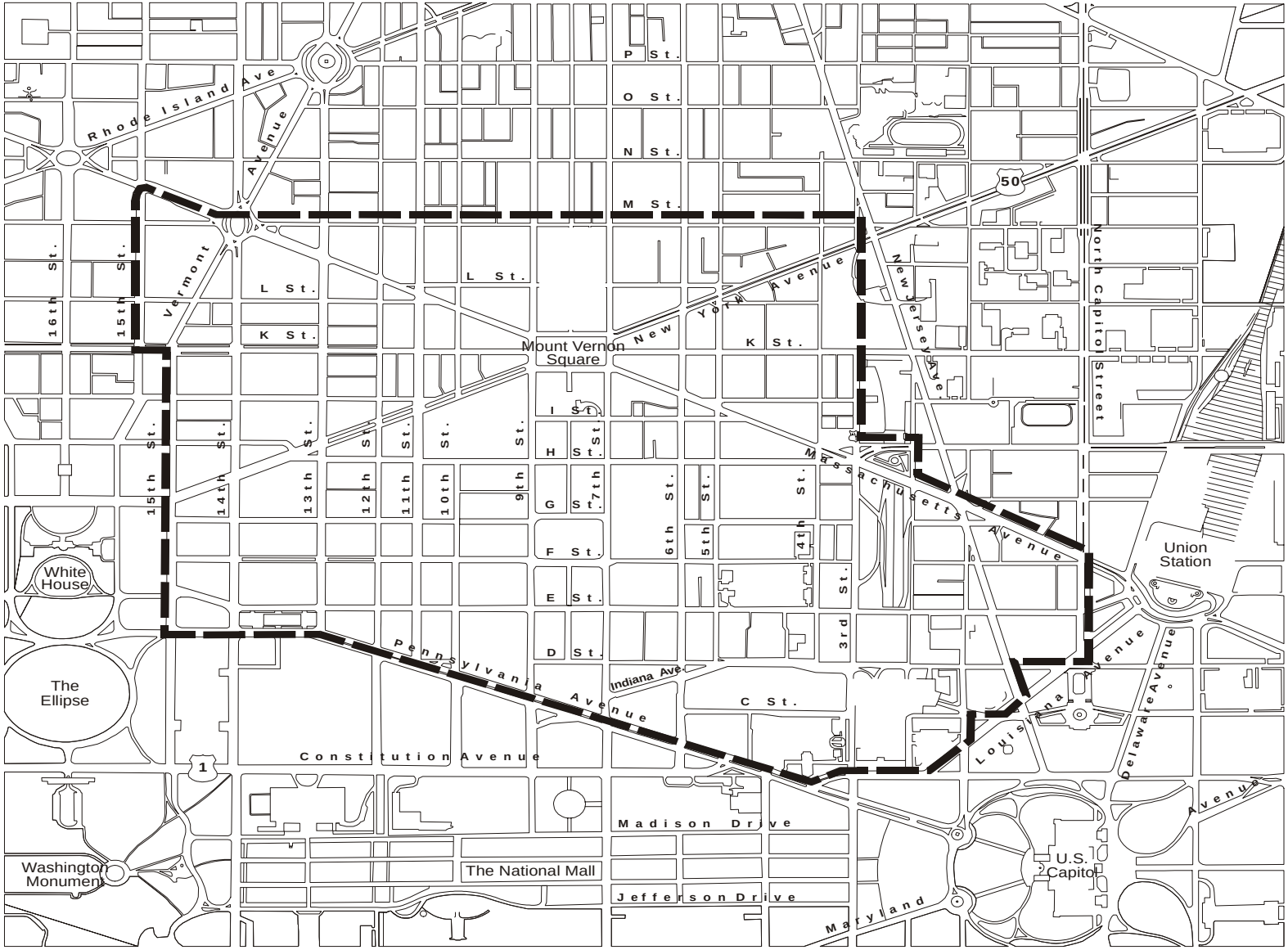

North
Not to scale

STREETSCAPE IMPACT AREA BOUNDARIES

EXHIBIT B

SPECIFICATIONS FOR
PRESSED CONCRETE BLOCK PAVING ON PCC BASE

I. GENERAL

Pressed concrete block paving shall be constructed in those areas as shown on the plans and/or as directed, and shall consist of hydraulically pressed, modular, precast concrete block pavers placed on a sand-cement bed of PCC base. The exact pattern, paver size, finish, quality, and construction details shall be as specified herein and as shown on the plans.

Pressed concrete block pavers shall be manufactured by Hastings Pavement Company, 410 Lakeville Road, Lake Success, N.Y., 11040; Hanover Prest Paving Company, R.D. #4, Bender Road, Hanover, Pa 17331; or approved equal.

Before work is begun, the Contractor shall present a sample paver to the Public Space Maintenance Administration for approval by the D.C. Department of Public Works.

II. MATERIALS

Materials used shall meet the following requirements:

A. Portland Cement - Section 817.01 of the Standard Specifications
B. Sand - Section 803.01 of the Standard Specifications for sand-cement bed.
C. Sand - Section 803.01 of the Standard Specifications for joints.
D. Water - Section 821.01 of the Standard Specifications.
E. Pressed Concrete Block Pavers:

1. Module size for sidewalk paving shall be 24"x 36"x 2" (nominal) or metric equivalent. Pavers shall have a tolerance of +/- 1/16" in length and width and +/- 1/8" in thickness. All top edges of pavers shall have a 3/16" bevel.

2. Color shall be charcoal gray.

3. Finish shall be non-slip, natural or stipple, finish. Large, rough, exposed aggregate surfaces are not acceptable.

4. Physical properties of pressed concrete pavers for the sidewalk shall meet the following requirements:

a. Average compressive strength of four (4) 2" x 2" x 2" cubes or 2" diameter cylindrical cores obtained from two pavers per lot shall be 5000 psi minimum as tested by AASHTO T 32.

b. Maximum 24-hour cold water absorption shall be less than five percent (5%) tested in accordance with AASHTO T 32, Section 7, except 4 specimens will be used. After 50 cycles of freezing and thawing in accordance with AASHTO T 32 or a 3 day application of three percent (3%) sodium chloride solution, 1/2 inch deep, weight loss shall be less than three percent (3%) and no visual signs of deterioration.

F. Preformed Expansion Joint - Section 807.01 of the Standard Specifications

G. Masonry Cement - The manufacturer shall certify that masonry cement meets the requirements of AASHTO M 150. Certification shall consist of a copy of the manufacturer's test results and statement by the manufacturer that the material presented by a lot or batch number has been sampled and tested, meeting the requirements of this Specification. The statement shall include the date of testing and shall be signed by an authorized agent of the manufacturer.

H. Sealant - Cold-pour sealant shall be a non-sag, elastomeric sealant meeting Federal Specification TT-227E, Type II. Color of sealant shall be natural gray.

I. Epoxy Mortar - Section 821.10 of the Standard Specifications

III. CONSTRUCTION METHODS

A. Construction of pressed concrete block paving for sidewalk shall meet the following requirements:

1. Aggregate Base Course - New Aggregate Base Course, as required, shall be brought to within 6 3/4 inches of final grade. Soils base used shall meet the requirements of Section 209 of the Standard Specifications.

2. PCC Base - Where pressed concrete block pavers are to be placed on PCC Base, that base shall be prepared as follows:

A four (4") inch PCC base shall be constructed on aggregate base course as per Section 209 of the Standard Specifications. PCC used shall be as per 817 of the Standard Specifications.

Broom or machine finishing, scoring, carbon powder, and joint sealer are not required.

Joint sealant shall be used in horizontal joints back of curbs and along building lines, and shall meet the requirements of Section 807.02 of the Standard Specifications.

3. Sand - Cement Bed - Sand-cement bedding course shall consist of 1 part cement and 2 parts sand by volume, mixed dry until the mass is of uniform color. Mixing may be done in an approved batch mixer or by hand on a clean, tight surface. Once thoroughly mixed, the mass shall be lightly moistened with water.

   The bedding course shall be placed and shaped upon the PCC base so that its finished depth shall be 3/4 inch. The bedding shall be shaped to a true- surface, paralleled with surface of finished paving, by means of a template or striking board. The bed shall then be struck off until proper alignment is secured. The area of bedding placed in any workday shall be scheduled so that no bedding course remains at the end of the day without a paver course. After final shaping, the bedding course shall not be disturbed prior to the laying of pavers.

4. Vaults - PEPCO will remove the old removable-type steel vault covers over transformer vaults and will furnish and install new steel pan vault covers. On the new pan covers, the contractor shall inlay pressed concrete block pavers on an epoxy-mortar bed. Level of pavers shall be flush with surrounding grade. Joints shall match that of the adjacent sidewalk pavers, as much as practicable. Small pavers, less than six (6") inches in length, will be allowed for use only in the paving of the PEPCO vault covers.

   PEPCO shall be notified at least three weeks in advance before paving work over the vault covers will begin.

   Where building vaults are encountered below grade, the pressed concrete block pavers shall be laid on sand-cement leveling bed installed in two lifts. The first lift shall be laid and compacted as a leveling course. The second lift shall be 3/4 inch depth and treated as a setting bed for pressed concrete block pavers.

   Expansion joint material, 1/2 inch wide, shall extend from the vertical face of the underground vaults up through the sand-cement beds to within approximately 1/2 of the surface of the Pressed Concrete Block paving. Joints shall be sealed with sealant.

5. Laying Pavers - Pavers shall be laid in successive straight courses starting perpendicular to the curb and working toward the building line. The non-slip finished face of the paver will be placed up.

   The surface edge of one paver shall be level with the next adjacent pavers so that no voids, rocking motions, or tripping hazards are encountered. Edge to edge arris shall not exceed 1/16 inch.

   Before the pressed concrete block pavers are installed in place, the backs of the pavers shall be moistened with water. Pavers shall be cut to fit around catch basins, wheelchair/bicycle ramps, and light standard bases. Where cutting is required, it shall be done with a high sped masonry saw producing clean, sharp edges.

   Square-poured concrete collars of color and treatment similar to that of pressed concrete block pavers, shall be constructed around flagpole bases, manholes, and other small sidewalk interruption, or as directed by the Engineer.

   The contractor shall procure from the paver suppliers, bags of the same sand, cement, and aggregate used in the manufacture of the pressed concrete paving blocks for use in the poured concrete areas. The poured concrete shall be scarred to match the adjacent pavers.

   Where irregularities of the line and grade exist at the building line, a shoreline of smaller pavers, poured concrete, or other treatment may be acceptable, upon approval by the engineer. In no case will pavers less than 6 inches in length be used.

6. Joint - Joints shall be 1/4 inch maximum between pavers. Edges of pavers shall be bevelled to 3/16 inch maximum. Combined width across beveled joint shall be 5/8 inch maximum.

   Immediately after the installation of the pressed concrete block pavers, the joints shall be swept with a dry sand-cement mix, 2:1 by volume. The surface shall then be swept and inspected. Joints shall be wetted with a fine spray after the sand-cement is worked on.

7. Imperfect Pavers - Any imperfect pavers, as determined by the engineer, shall be removed and replaced.

EXHIBIT C
Rev.3/1/00

MASTER STREET TREE PLAN

Area generally bounded by: Pennsylvania Avenue, M Street, North Capitol Street, 15th Street, NW

NORTH CAPITOL STREET	Louisiana Avenue (west side only) To Massachusetts Avenue	Pin Oak (Quercus palustris)
1st STREET, NW	Louisiana Avenue to F Street	Sugar Maple (Acer saccharum)
2nd STREET, NW	Constitution Avenue to H Street	Greenspire Linden (Tilia cordata)
3rd STREET, NW	Pennsylvania Avenue to H Street	Scarlet Oak (Quercus coccinea)
4th STREET, NW	D Street to M Street	Northern Red Oak (Quercus borealis max.)
5th STREET, NW	D Street to M Street	Male Ginkgo (Acer rubrum)
6th STREET, NW	Pennsylvania Avenue to M Street	Chinese Elm (Ulmus parvifolia)
7th STREET, NW	Pennsylvania Avenue to L Street	Goldenrain Tree (Koelreuteria paniculata)
	L Street north	Shumard Oak (Quercus shumardii)
8th STREET, NW	D Street to F Street	October Glory Red Maple (Acer rubrum 'October Glory')
9th STREET, NW	Pennsylvania Avenue to M Street	Scarlet Oak (Quercus coccinea)
10th STREET, NW	Pennsylvania Avenue to M Street	Bloodgood London planetree (Platanus x acerifolia 'Bloodgood')
11th STREET, NW	Pennsylvania Avenue to M Street	Willow Oak (Quercus phellos)
12th STREET, NW	Pennsylvania Avenue to M Street	Bloodgood London planetree (Platanus x acerifolia 'Bloodgood')
13th STREET, NW	Pennsylvania Avenue to M Street	Willow Oak (Quercus phellos)
14th STREET, NW	Pennsylvania Avenue to Thomas Circle	Shumard Oak (Quercus shumardii)
15th STREET, NW	Pennsylvania Avenue to Vermont Avenue and K Street to Massachusetts Avenue	Willow Oak (Quercus phellos)

C STREET, NW	3rd Street to 7th Street	Palmore Green Ash (Fraxinus pennsylvanica 'Palmore')
D STREET, NW	Louisiana Avenue to Pennsylvania Avenue	Palmore Green Ash (Fraxinus pennsylvanica 'Palmore')
E STREET, NW	North Capitol to 3rd Street	Goldenrain tree (Koelreuteria paniculata)
F STREET, NW	North Capitol to 15th Street	Chinese Elm (Ulmus parvifolia)
G STREET, NW	Massachusetts to 15th Street	Chinese Elm (Ulmus parvifolia)
G PLACE, NW	9th Street to 10th Street	Ginkgo (Male) (Ginkgo biloba male)
H STREET, NW	3rd Street to 5th Street	Katsura
	5th Street to 9th Street	Upright Japanese Kalsura (Cercidiphyllum japonicum)
	9th Street to 15th Street	Katsura
I STREET, NW	Massachusetts Avenue to 9th Street	Dawn Redwood (Metasequoia glyptostroboides)
	9th Street to 15th Street	October Glory Red Maple (Acer rubrum 'October Glory')
K STREET, NW	3rd Street to 15th Street (curb only)	Willow Oak (Quercus phellos)
	13th Street to 15th Street (median only)	Zelkova (Zelkova serrata)
L STREET, NW	4th Street to 15th Street	Bloodgood London Planetree (Platanus x acerifolia 'Bloodgood')
M STREET, NW	3rd Street to 15th Street	October Glory Red Maple (Acer rubrum 'October Glory')
MASSACHUSETTS AVENUE, NW	North Capitol to 15th Street	Silver Linden (Tilia tomentosa)
NEW JERSEY AVENUE, NW	C Street to Massachusetts Ave.	Zelkova (Zelkova serrata)
NEW YORK AVENUE, NW	3rd Street to 15th Street	Greenspire Littleleaf linden (Tilia cordata "Greenspire")

INDIANA AVENUE, NW	5th Street to 7th Street	Scarlet Oak (Quercus coccinea) (at curb) Honey Locust (Gleditsia triacanthos) (behind sidewalk)
THOMAS CIRCLE, NW		Upright English Oak (Quercus robur fastigiata)
Mt. VERNON PLACE, NW	7th Street to 9th Street	Upright Ginkgo (male) (Ginkgo Biloba "Fastigiata" – "Sentry")
VERMONT AVENUE, NW	Thomas Circle to 15th Street	Scarlet Oak (Quercus coccinea)

Standard Trees for Chinatown Area

5th STREET, NW	G Street to Massachusetts Avenue	Ginkgo (male) (Ginkgo biloba male)
6th STREET, NW	G Street to Massachusetts Avenue	Chinese Elm (Ulmus parvifolia)
7th STREET, NW	G Street to Massachusetts Avenue	Goldenrain Tree (Koelruteria paniculata)
8th STREET, NW	G Street to Mt Vernon Place	October Red Maple (Acer rubrum 'October Glory')
G STREET, NW	5th Street to 7th Street (In front of museum)	Chinese Elm (Ulmus parvifolia)
	7th Street to 8th Street	Chinese Elm (Ulmus parvifolia)
H STREET, NW	5th Street to 8th Street	Upright Japanese Katsura (Cercidiphyllum japanicum)
I STREET, NW	5th Street to 8th Street	Dawn Redwood (Metaseaquola glyptostroboldes)
MASSACHUETTS AVENUE, NW	5th Street to 7th Street	Silver Linden (Tilia tomentosa)
MOUNT VERNON SQUARE, NW		Zelkova (Zelkova serrata)